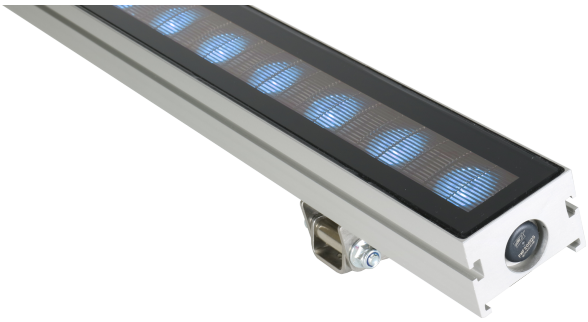

linea xs eco
pureColor
Operation Manual

Dear customer,

Thank you for choosing our product.

Please read this user manual carefully before using the product. This manual is part of the product and should be kept in a safe place for future reference If you pass the product on to third parties, please also pass on this operation manual.

Safety Instructions

sales@biontechnologies.com
www.biontechnologies.com

Phone:
(DE) +49 8231 95787 0

All information without guarantee. Errors, changes and misprints excepted.

SCOPE OF DELIVERY

If you notice any transport damage or discrepancies between the specified delivery contents and the packaging contents, please notify your point of sale immediately.

INSTALLATION

1

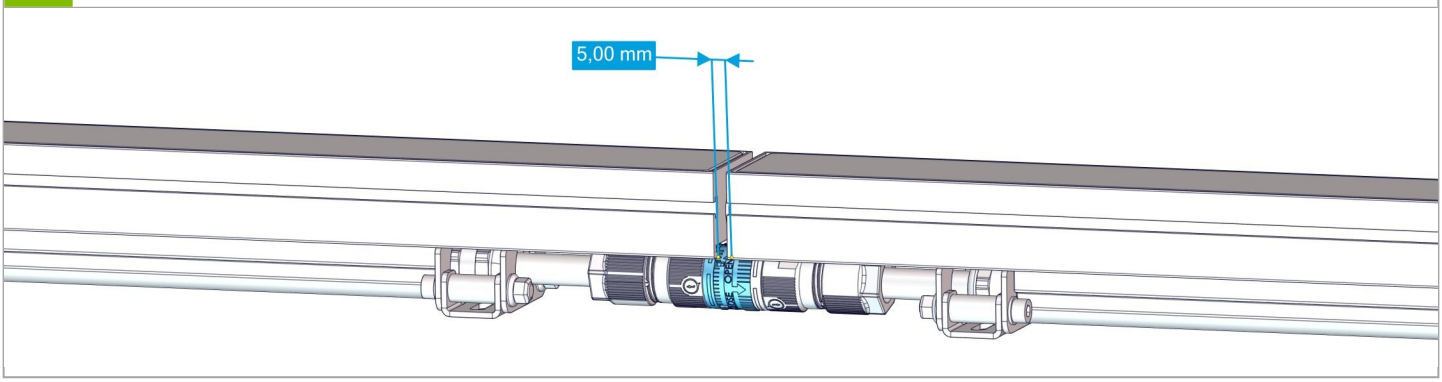

2

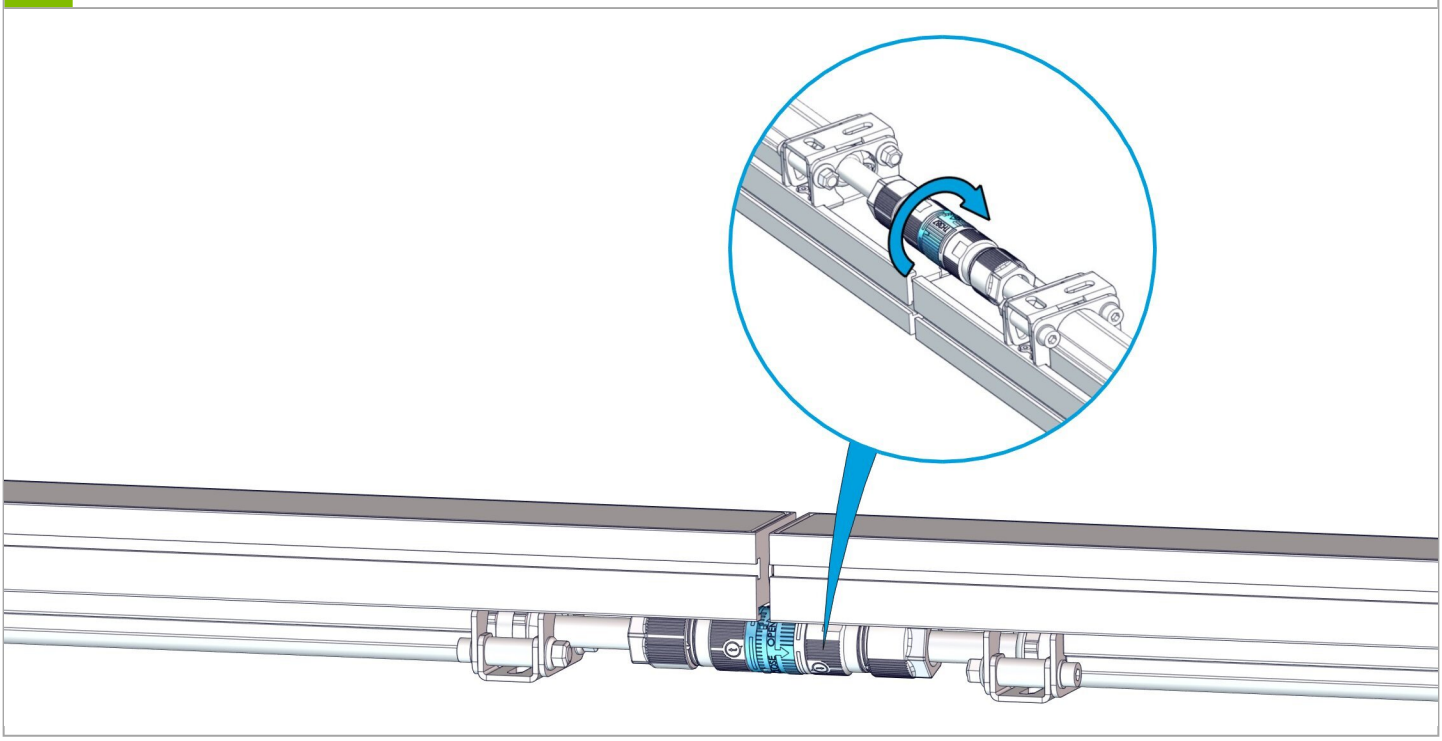

All information without guarantee. Errors, changes and misprints excepted.

3

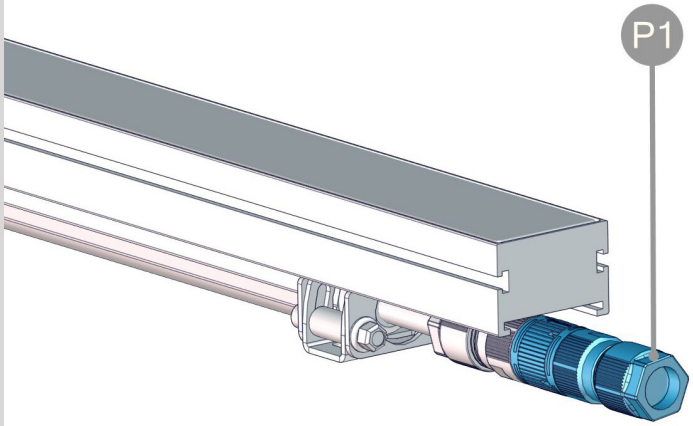

GENERAL

MAINTENANCE

APPROBATION(S):

MANUFACTURER

Bion Technologies GmbH
Lindberghstrasse 15
86343 Koenigsbrunn

Tel: +49 (0)8231/95787-0
Fax: +49 (0)8231/95787-29

www.biontechnologies.com
info@biontechnologies.com

All rights reserved / Subject to change / Specifications may change without notice

All information without guarantee. Errors, changes and misprints excepted.